M1986 SERIES

AC/DC POWER SUPPLY

PRODUCT HIGHLIGHTS

- **AC/DC POWER SUPPLY**
- **SINGLE PHASE INPUT (50/60/400Hz)**
- **CE MARKING (IEC 62368-1)***
- **HIGH POWER FACTOR**
- **HIGH DENSITY**
- **SINGLE DC OUTPUT**
- **UP TO 300 W**

* Depending on configuration

Applications

Military (Airborne, ground-fix, shipboard), Ruggedized, Telecom, Industrial

Special Features

- Miniature size
- High efficiency
- Wide input range
- High power factor
- Input / Output isolation
- Inrush Current Limiter
- External Inhibit (On/Off)
- Fixed switching freq. (250 kHz)
- Externally synchronize
- EMI filters included
- Remote sense compensation
- Indefinite short circuit protection with auto-recovery
- Over-voltage shutdown with auto-recovery
- Over temperature shutdown with auto-recovery

Electrical Specifications

AC Input

Option 1:
85 to 265 V_{AC} ; 50/60Hz
Single-phase, 5A $_{max}$
IAW MIL-STD-1399-300B Type I
(115 V_{rms} / 60 Hz)

Option 2:
103 to 127 V_{AC} ; 400Hz
Single-phase, 5A $_{max}$

DC Output

Voltage range: 24 to 50 V_{DC}

Current range: 0 to 12.5 A
Power range: 0 to 300 W

3.3 ≤ V_{DC} < 24V output voltages:
Consult factory for details

Load Transient Response

For 28 V_{DC} output, current change from 50% - 100% - 50%, output dynamic response < 5%.

Isolation

Input to Output: 1000 V_{DC}
Input to Case: 1000 V_{DC}
Output to case: 200 V_{DC}

Line/Load regulation

Less than 1% (no load to full load, –40 °C to +85 °C)

Ripple and Noise

100 - 150 mV_{p-p}, typical (max 1%) without external capacitance.

Efficiency

115 V_{rms} / 400 Hz ≥ 80%
230 V_{rms} / 50 Hz ≥ 85%
(24 V_{DC} output, full load, 25°C)

Turn on Transient

Output voltage overshoot during power on < 5%

Electromagnetic Compatibility

EMC (MIL-STD)

Designed to meet * MIL-STD-461F:

Conducted Emission	CE101, CE102
Conducted Susceptibility	CS101, CS114, CS115, CS116
Radiated Emission	RE101, RE102
Radiated Susceptibility	RS101, RS103

EMC (EN/IEC)

Radiated Emission Conducted Emission	EN55032 CLASS A
Harmonic current Emission	IEC6100-3-2 CLASS A
Voltage Fluctuation & Flicker	IEC6100-3-3

Immunity Test (EN/IEC)

Test Type	Test Method	Test Type/Level/Class
ESD	EN61000-4-2	Enclosure; Contact; ±4Kv; [B]
Radiated Immunity	EN61000-4-3	(80-6000) MHz; 10V/m; [A]
EFT	EN61000-4-4	±2kV; [B]
Surge	EN61000-4-5	L-L: ±1kV; [B] L-E: ±2kV; [B]
Conducted Immunity	EN61000-4-6	150kHz – 80MHz ; 10Vrms; [A]
Magnetic Field	EN61000-4-8	50Hz; 30A/m; [A]
Voltage dips and short interruptions	EN61000-4-11	50Hz; (100/60/30)%; [B & C]

* Compliance achieved with shielded harness and static resistive load.

Protections *

Input

- **Inrush Current Limiter**
  Initial input current surge to charge internal capacitances is limited internally.
- **Under Voltage Lock-Out**
  Unit protects itself (no damage) below 75 V_{AC} @ full load.

Output

- **Active Over Voltage Protection**
  10% ± 2% above nominal voltage.
- **Passive Over Voltage Protection**
  Transorb at output selected 20% ± 5% above nominal voltage.
- **Over Load / Short Circuit**
  10 - 30% above maximum current, indefinitely (Hiccup).

General

- **Over Temperature Protection**
  Shutdown at base plate temp. above +105°C ± 5 °C Automatic recovery at base plate temp. below +95°C ± 5°C

Environmental Conditions

Designed to Meet MIL-STD-810F

Temperature

Methods 501.4 & 502.4
Operating: –40°C to +85°C (at baseplate)
Storage: –55°C to +125°C (ambient)

Vibration

MIL-STD 810F, Method 514.5, Procedure I, Category 24, General minimum integrity exposure, IAW Figure 514.5C-17, 1 hour per axis

Altitude

Method 500.4
Procedures I – Storage/Air transport: up to 70,000 ft. (non-operational)
Procedure II – Operation/Air Carriage: up to 40,000 ft. (operational)

Shock

Method 516.5
Procedure I
Functional shock,40g, 15-23ms, Terminal peak Sawtooth shock pulse

Humidity

Method 507.4
Up to 95% RH

Salt Fog

Method 509.4

Reliability

150,000 hours, calculated IAW MIL-HDBK-217F Notice 2 at +85°C baseplate, Ground fixed conditions.

Environmental Stress Screening (ESS)

100% of delivered power supplies are tested at low ambient temperature, high baseplate temperature and at standard room temperature.
Additional tests, such as random vibration and thermal cycling can be added. **Consult factory for details.**

---

* Thresholds and protections can be modified / removed – please consult factory

Pin Assignment

J1 - Input connector

Type: Positronic CBM3W3M81000/AA or eq.
Mates with:
Shell: Positronic CBM3W3S00000/AA or eq.
Pins: FS4820D/AA-15 or eq (AWG#20)

Pin No.	Function	
A1	NEUTRAL	●
A2	PHASE	●
A3	CHASSIS	●

J2 - Output connector

Type: HDC15S50000-15 or eq.

Mates with: M24308/4-2F or eq.

Pin No.	Function	
1	SYNC	●
2	INHIBIT	●
3	SENSE RTN	●
4	OUTPUT RTN	●
5	OUTPUT RTN	●
6	OUTPUT	●
7	OUTPUT	●
8	SENSE	●
9	SIGNAL RTN	●

Pin No.	Function	
10	OUTPUT RTN	●
11	OUTPUT RTN	●
12	OUTPUT RTN	●
13	OUTPUT	●
14	OUTPUT	●
15	OUTPUT	●

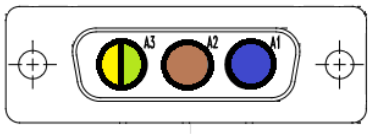

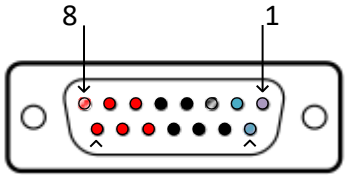

(Connectors shown from front view)

Functions and Signals

SENSE

The SENSE line is used to achieve accurate voltage regulation at load terminals. To use this feature, connect this pin directly to load's positive terminal.
If this function is not required, short SENSE pin to OUTPUT pins as close as possible to the unit.

SENSE RTN

The SENSE RTN line is used to achieve accurate voltage regulation at load terminals. To use this feature, connect this pin directly to load's negative terminal.
If this function is not required, short SENSE RTN pin to OUTPUT RTN pins as close as possible to the unit.

Note: The use of remote sense has a limit of voltage dropout between the converter's output and the load's terminals of approximately ±1V of nominal output voltage.

INHIBIT

The INHIBIT signal is used to turn the power supply ON and OFF. TTL "1" or OPEN – Power supply active (output turned on).
TTL "0" or SHORT to Signal RTN – Power supply inhibited (output turned off). If this function is not required, leave this pin unconnected.

SYNC

The SYNC signal is used to synchronize the power supply's switching frequency to system's clock. Valid external clock frequency is square wave, 500kHz ± 25kHz, V_{p-p} = 0V - 5V.
If this function is not required, leave this pin unconnected - the power supply will use its internal clock.

SIGNAL RTN

Both INHIBIT and SYNC signals are referenced to this pin. This pin is floating from both input and output.

CHASSIS

The CHASSIS pin allows additional connection of unit's chassis to system ground.

Typical Connection Diagram

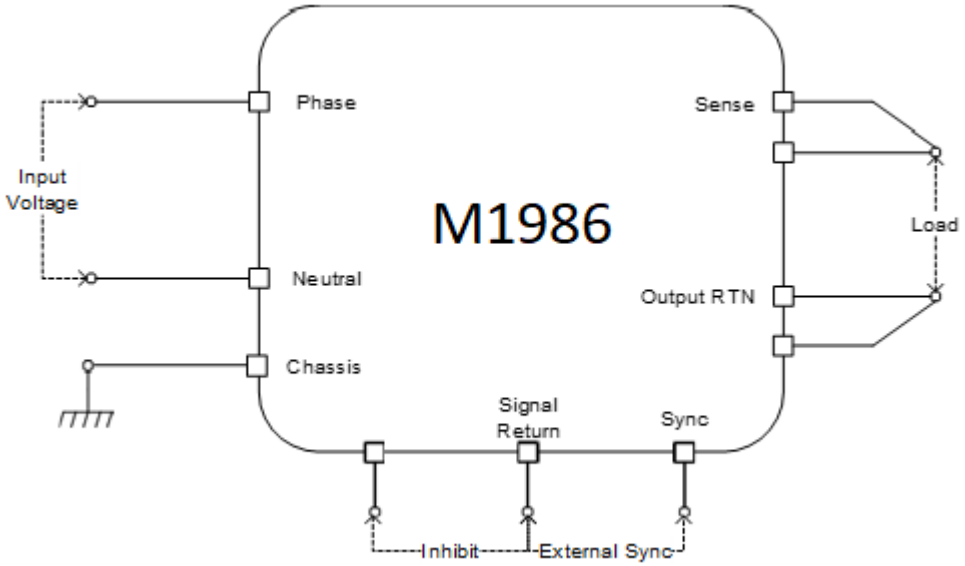

Outline Drawing

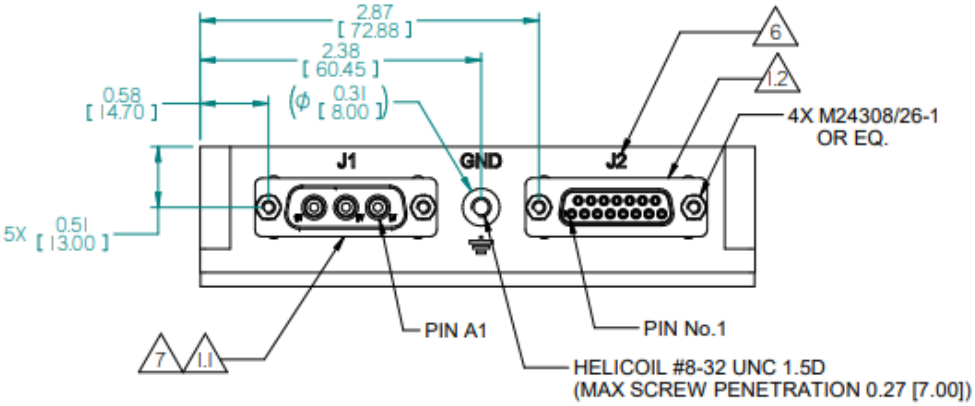

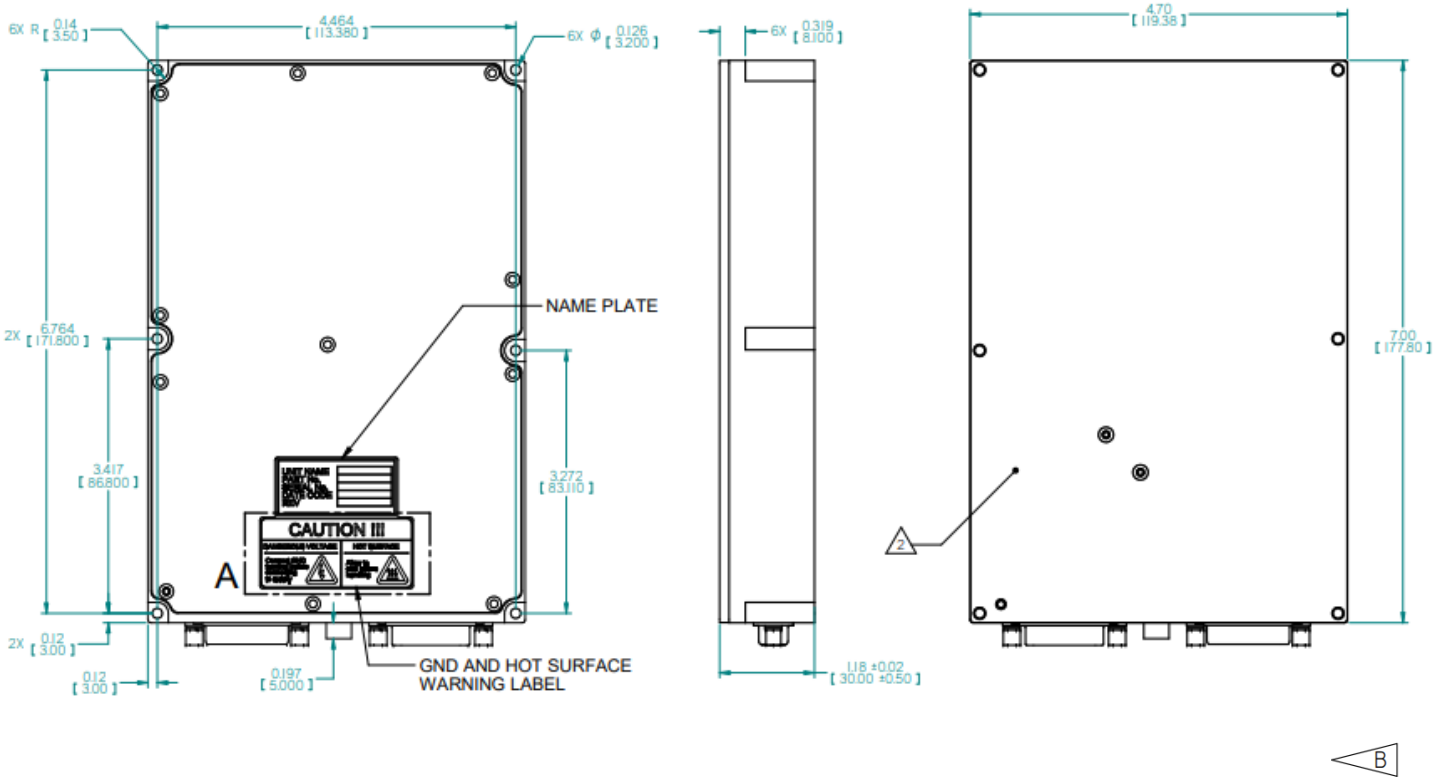

NOTES :

1. CONNECTORS:
   1.1: J1 - INPUT CONNECTOR - CBM3W3M81000 OR EQ.
   1.2: J2 - OUTPUT CONNECTOR - HDC15S50000-15 OR EQ.
2. HEAT DISSIPATION AREA - TOTAL AREA 20,300mm²
3. WORKMANSHIP SHALL BE MIL-STD-454, REQT. 9
4. MTL. AL 6061-T651& AL 5052-H32
5. CHROMATE CONVERSION COATING PER MIL -DTL-5541F,TYPE 2 CLASS 1A
6. ENGRAVING:
CHARACTERS HEIGHT: 3 (mm), DEPTH: 0.4 (mm).
ENGRAVING FILLED WITH BLACK COLOR.
7. SUPLLIED WITH CABLE P/N: M1986701_H99 (ENRCON P/N: 24-005401)

DETAIL A

A

UNLESS OTHERWISE SPECIFIED
DIMENSIONS ARE IN INCH [mm]
TOLERANCES ARE:

DECIMALS	ANGLES
.XX ± .01 [0.3]	± 1°
.XXX± .006 [0.15]	

DO NOT SCALE DRAWING

B

Standard Configurations

Part number	Input		Output	
	Voltage range	Frequency	Voltage	Current
M1986-802*	1-phase, 85 to 265 V_{AC}	50 / 60 / 400 Hz	12 V_{DC}	20 A
M1986-803*	1-phase, 85 to 265 V_{AC}	50 / 60 / 400 Hz	24 V_{DC}	12.5 A
M1986-804*	1-phase, 85 to 265 V_{AC}	50 / 60 / 400 Hz	28 V_{DC}	10.7 A
M1986-805*	1-phase, 85 to 265 V_{AC}	50 / 60 / 400 Hz	48 V_{DC}	6.2 A
M1986-102	1-phase, 85 to 265 V_{AC}	50 / 60 / 400 Hz	12 V_{DC}	20 A
M1986-103	1-phase, 85 to 265 V_{AC}	50 / 60 / 400 Hz	24 V_{DC}	12.5 A
M1986-104	1-phase, 85 to 265 V_{AC}	50 / 60 / 400 Hz	28 V_{DC}	10.7 A
M1986-105	1-phase, 85 to 265 V_{AC}	50 / 60 / 400 Hz	48 V_{DC}	6.2 A

- These configurations are REACH Compliant
- The aluminum parts are chromate conversion coated per MIL-DTL-5541F, Type II CLASS 1A or eq.

***Note:** Only -8XX configurations are CE certified.

Additional standard configurations available. **Consult factory for details.**

Note: Specifications are subject to change without prior notice by the manufacturer.